Flow Chart

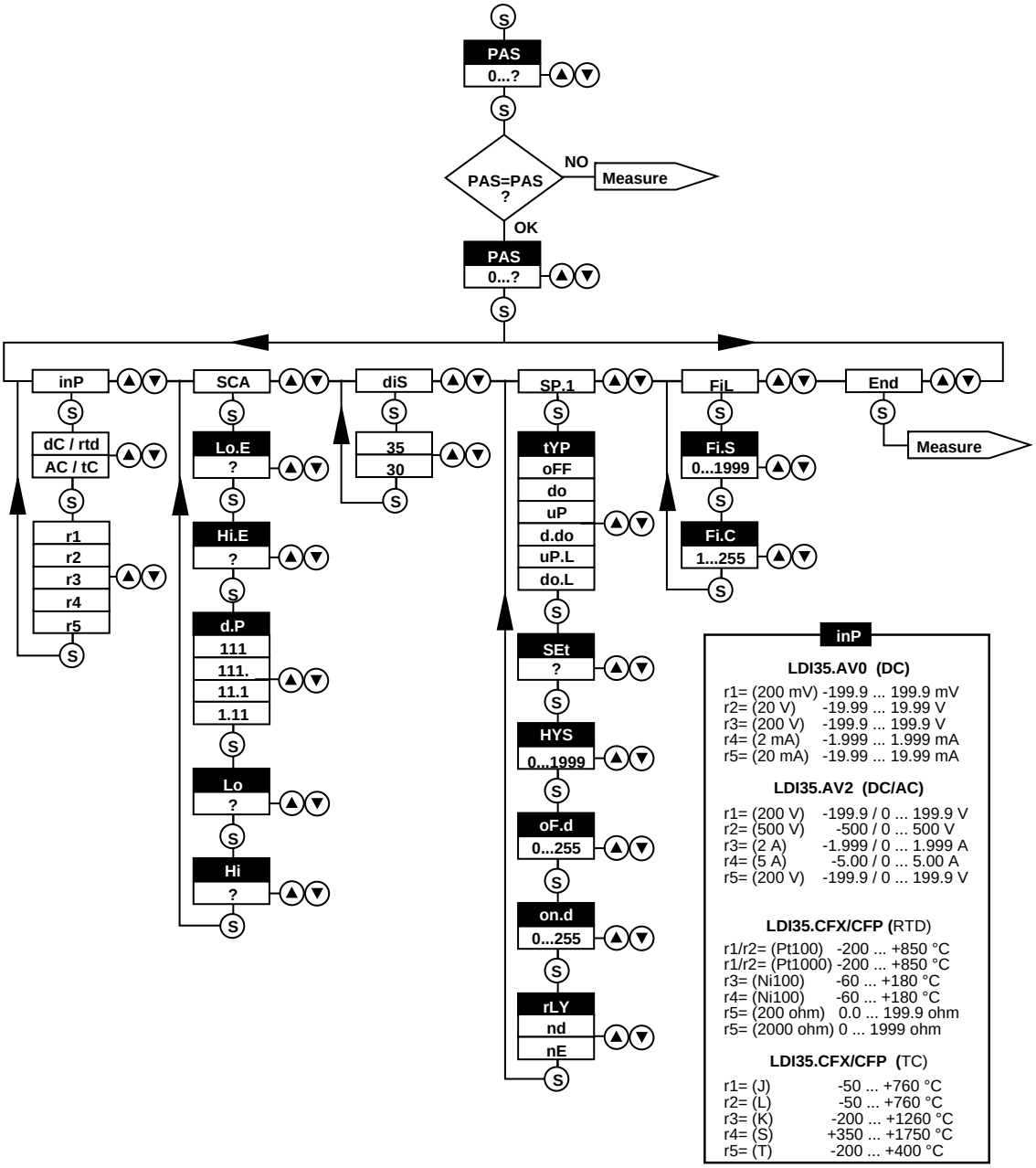

Gross Automation (877) 268-3700 · www.carlogavazzisales.com · sales@grossautomation.com

Diagramma di Flusso

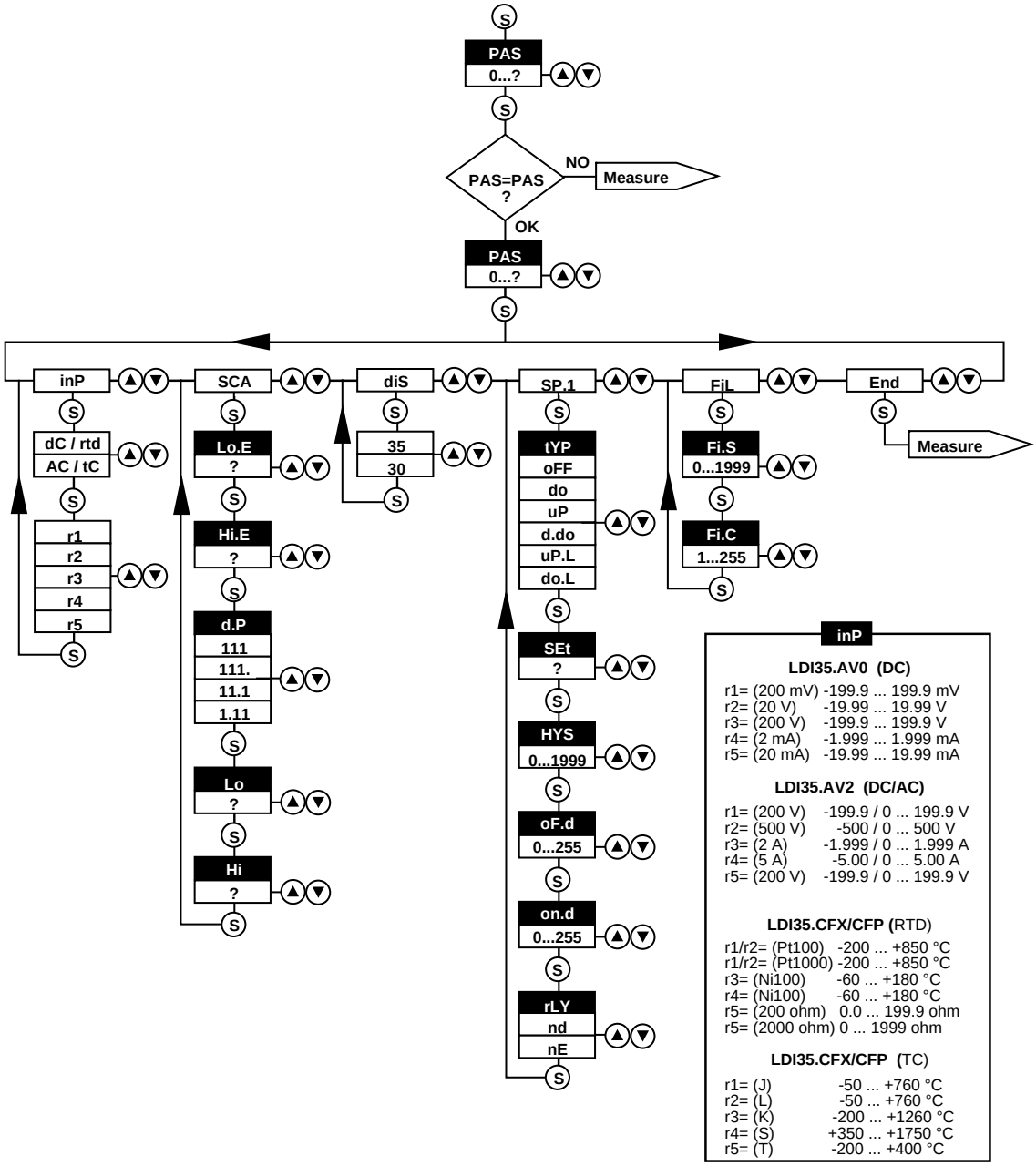

Gross Automation (877) 268-3700 · www.carlogavazzisales.com · sales@grossautomation.com